La Parisienne Double Marble Washstand

DIMENSIONS (mm)

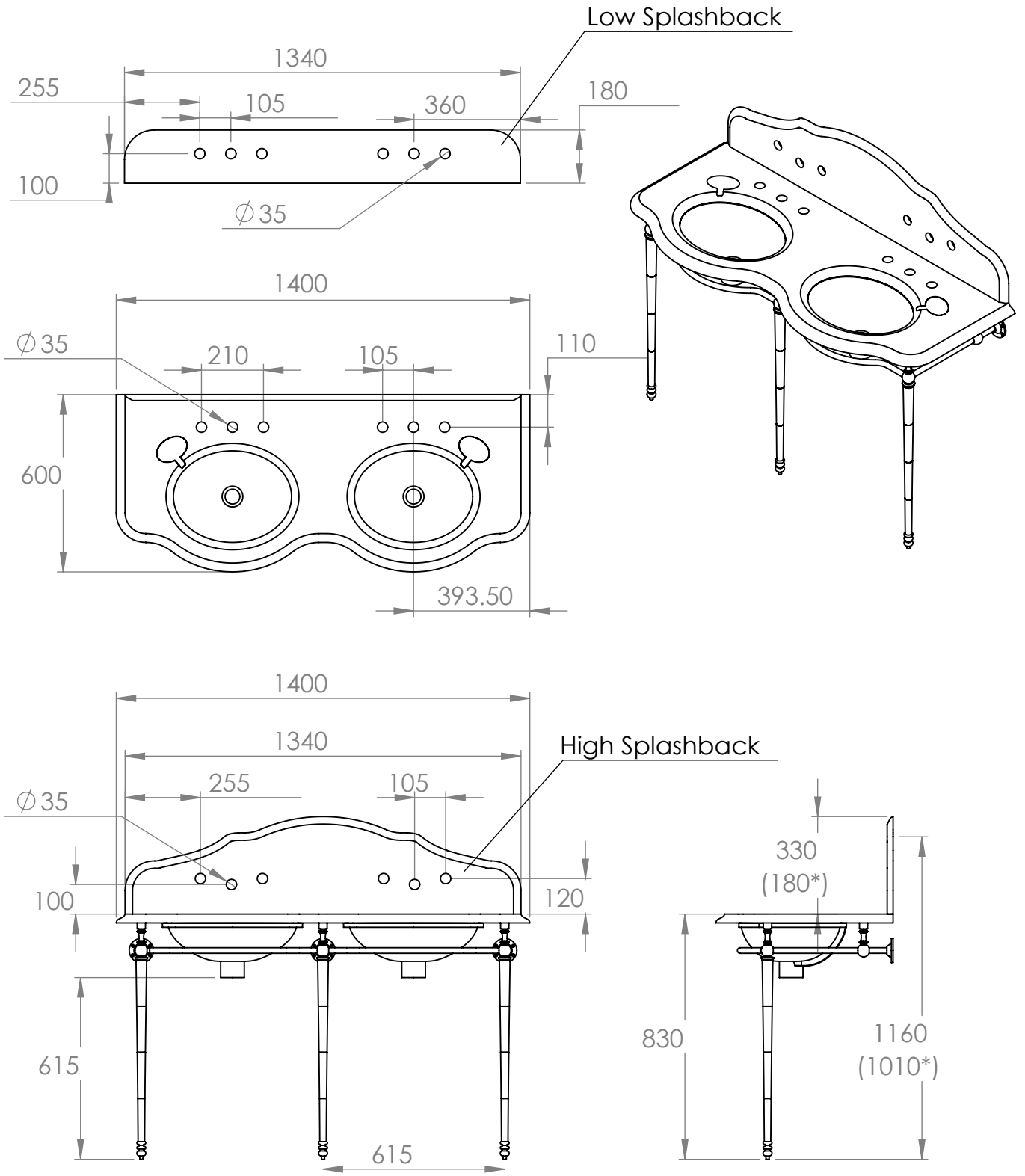

AVAILABLE WITH A CHOICE OF HIGH OR LOW SPLASHBACK,
AND WITH DECK OR WALL MOUNTED TAP HOLES

PLEASE NOTE: Whilst every effort is made to ensure the accuracy of these specification sheets, they are subject to change without notice as part of the company's ongoing product development process.

PHONE: +44 1233 840 840
EMAIL: INFO@CATCHPOLEANDRYE.COM
ADDRESS: CATCHPOLE & RYE, SARACENS DAIRY, ASHFORD, KENT, TN27 0SA

©COPYRIGHT 2024 CATCHPOLE & RYE.
ALL RIGHTS RESERVED.